Condition Based URIs Selection Architecture

Candidate Version 1.0 – 22 Sep 2009

Open Mobile Alliance

OMA-AD-CBUS-V1_0-20090922-C

© 2009 Open Mobile Alliance Ltd. All Rights Reserved.
Used with the permission of the Open Mobile Alliance Ltd. under the terms as stated in this document.

Use of this document is subject to all of the terms and conditions of the Use Agreement located at http://www.openmobilealliance.org/UseAgreement.html.

Unless this document is clearly designated as an approved specification, this document is a work in process, is not an approved Open Mobile Alliance™ specification, and is subject to revision or removal without notice.

You may use this document or any part of the document for internal or educational purposes only, provided you do not modify, edit or take out of context the information in this document in any manner. Information contained in this document may be used, at your sole risk, for any purposes. You may not use this document in any other manner without the prior written permission of the Open Mobile Alliance. The Open Mobile Alliance authorizes you to copy this document, provided that you retain all copyright and other proprietary notices contained in the original materials on any copies of the materials and that you comply strictly with these terms. This copyright permission does not constitute an endorsement of the products or services. The Open Mobile Alliance assumes no responsibility for errors or omissions in this document.

Each Open Mobile Alliance member has agreed to use reasonable endeavors to inform the Open Mobile Alliance in a timely manner of Essential IPR as it becomes aware that the Essential IPR is related to the prepared or published specification. However, the members do not have an obligation to conduct IPR searches. The declared Essential IPR is publicly available to members and non-members of the Open Mobile Alliance and may be found on the "OMA IPR Declarations" list at http://www.openmobilealliance.org/ipr.html. The Open Mobile Alliance has not conducted an independent IPR review of this document and the information contained herein, and makes no representations or warranties regarding third party IPR, including without limitation patents, copyrights or trade secret rights. This document may contain inventions for which you must obtain licenses from third parties before making, using or selling the inventions. Defined terms above are set forth in the schedule to the Open Mobile Alliance Application Form.

NO REPRESENTATIONS OR WARRANTIES (WHETHER EXPRESS OR IMPLIED) ARE MADE BY THE OPEN MOBILE ALLIANCE OR ANY OPEN MOBILE ALLIANCE MEMBER OR ITS AFFILIATES REGARDING ANY OF THE IPR'S REPRESENTED ON THE "OMA IPR DECLARATIONS" LIST, INCLUDING, BUT NOT LIMITED TO THE ACCURACY, COMPLETENESS, VALIDITY OR RELEVANCE OF THE INFORMATION OR WHETHER OR NOT SUCH RIGHTS ARE ESSENTIAL OR NON-ESSENTIAL.

THE OPEN MOBILE ALLIANCE IS NOT LIABLE FOR AND HEREBY DISCLAIMS ANY DIRECT, INDIRECT, PUNITIVE, SPECIAL, INCIDENTAL, CONSEQUENTIAL, OR EXEMPLARY DAMAGES ARISING OUT OF OR IN CONNECTION WITH THE USE OF DOCUMENTS AND THE INFORMATION CONTAINED IN THE DOCUMENTS.

© 2009 Open Mobile Alliance Ltd. All Rights Reserved.
Used with the permission of the Open Mobile Alliance Ltd. under the terms set forth above.

Contents

1. SCOPE (INFORMATIVE) 5
2. REFERENCES 6
   2.1 NORMATIVE REFERENCES 6
   2.2 INFORMATIVE REFERENCES 6
3. TERMINOLOGY AND CONVENTIONS 7
   3.1 CONVENTIONS 7
   3.2 DEFINITIONS 7
   3.3 ABBREVIATIONS 7
4. INTRODUCTION (INFORMATIVE) 9
   4.1 VERSION 1.0 9
5. ARCHITECTURAL MODEL 10
   5.1 DEPENDENCIES 10
      5.1.1 Collaboration with Evaluation Information sources 10
      5.1.2 Collaboration with XDM Enabler 10
   5.2 ARCHITECTURAL DIAGRAM 10
   5.3 FUNCTIONAL COMPONENTS AND INTERFACES/REFERENCE POINTS DEFINITION 12
      5.3.1 CBUS Functional Entities 12
      5.3.2 Description of Interfaces 14
      5.3.3 Description of the Reference Points 15
   5.4 CBUS OVER 3GPP/3GPP2 IMS 15
   5.5 SECURITY CONSIDERATIONS 17
APPENDIX A. CHANGE HISTORY (INFORMATIVE) 18
   A.1 APPROVED VERSION HISTORY 18
   A.2 DRAFT/CANDIDATE VERSION 1.0 HISTORY 18
APPENDIX B. FLOWS (INFORMATIVE) 20
   B.1 SELECTING GROUP MEMBERS BASED ON SIMPLE CONDITIONS AND ONE-TIME EVALUATION 20
      B.1.1 Selecting Group members when Request-contained Resource Lists is not supported 20
      B.1.2 Selecting Group members using Request-contained Resource Lists 22
   B.2 SELECTING GROUP MEMBERS BASED ON COMBINED CONDITIONS AND ONE-TIME EVALUATION 24
      B.2.1 Selecting Group members when Request-contained Resource Lists is not supported 24
      B.2.2 Selecting Group members using Request-contained Resource Lists 26
   B.3 SELECTING GROUP MEMBERS BASED ON SIMPLE CONDITIONS AND RE-EVALUATION WHEN THE EVALUATION INFORMATION CHANGED 28
      B.3.1 Selecting Group members when Request-contained Resource Lists is not supported 29
      B.3.2 Selecting Group members using Request-contained Resource Lists 31
APPENDIX C. CBUS SERVICE PROVISIONING (INFORMATIVE) 34

Figures

Figure 1: CBUS architecture (Interface view) 11

Figure 2: CBUS architecture (Reference Point view) 12

Figure 3 CBUS Enabler over 3GPP/3GPP2 IMS 16

Figure 4: Selecting Group members based on simple Conditions and one-time evaluation when not using RLS 21

Figure 5: Selecting Group members based on simple Conditions and one-time evaluation when using RLS 23

Figure 6: Selecting Group members based on combined Conditions and one-time evaluation when not using RLS 25

Figure 7: Selecting Group members based on combined conditions and one-time evaluation when using RLS 27

© 2009 Open Mobile Alliance Ltd. All Rights Reserved.
Used with the permission of the Open Mobile Alliance Ltd. under the terms as stated in this document.

Figure 8: Selecting Group members based on simple Conditions and re-evaluation when the Evaluation Information changed without RLS **30**

Figure 9: Selecting Group members based on simple Conditions and re-evaluation when the Evaluation Information changed with RLS **32**

Tables

No table of figures entries found.

© 2009 Open Mobile Alliance Ltd. All Rights Reserved.
Used with the permission of the Open Mobile Alliance Ltd. under the terms as stated in this document.

1. Scope (Informative)

The scope of the Condition Based URIs Selection (CBUS) V1.0 architecture document is to define the architecture for the CBUS Version 1.0 Enabler. The architecture is based on the requirements listed for the Enabler in the CBUS requirement document [CBUS_RD].

© 2009 Open Mobile Alliance Ltd. All Rights Reserved.
Used with the permission of the Open Mobile Alliance Ltd. under the terms as stated in this document.

2. References

2.1 Normative References

[3GPP2-X.S0013-002] 3GPP2 X.S0013-002 “All-IP Core Network Multimedia Domain: IP Multimedia Subsystem - Stage 2”, URL: http://www.3gpp2.org/Public_html/specs/index.cfm

[3GPP-TS_23.002] 3GPP TS 23.002 “Network architecture”, URL: http://www.3gpp.org/ftp/Specs/archive/23_series/23.002/

[3GPP-TS_23.228] 3GPP TS 23.228 “IP Multimedia Subsystem (IMS); Stage 2”, URL: http://www.3gpp.org/ftp/Specs/archive/23_series/23.228/

[CBUS_RD] “Condition Based URIs Selection Requirement”, Version 1.0, Open Mobile Alliance™, OMA-RD-CBUS-V1_0, URL: http://www.openmobilealliance.org/

[DM_SO] “OMA Device Management Standardized Objects”, Version 1.2, Open Mobile Alliance™, OMA-TS-DM-StdObj-V1_2, URL: http://www.openmobilealliance.org/

[LOCSIP_AD] “Location in SIP/IP core Architecture”, Version 1.0, Open Mobile Alliance™, OMA-AD-LOCSIP-V1_0, URL: http://www.openmobilealliance.org/

[OSE] “OMA Service Environment”, Open Mobile Alliance™, URL: http://www.openmobilealliance.org/

[PRS_AD] “Presence SIMPLE Architecture”, Version 2.0, Open Mobile Alliance™, OMA-AD-Presence_ SIMPLE-V2_0, URL: http://www.openmobilealliance.org/

[RFC2119] “Key words for use in RFCs to Indicate Requirement Levels”, S. Bradner, March 1997, URL: http://www.ietf.org/rfc/rfc2119.txt

[RFC3261] IETF RFC 3261: “SIP: Session Initiation Protocol”, J. Rosenberg et al, June 2002, URL: http://www.ietf.org/rfc/rfc3261.txt

[XDM_AD] “XML Document Management Architecture”,Version 2.0, Open Mobile Alliance™, OMA-AD-XDM-V2_0, URL: http://www.openmobilealliance.org/

2.2 Informative References

[3GPP TS 33.203] 3GPP TS 33.203: "Access security for IP-based services". URL: http://www.3gpp.org/

[3GPP2 S.R0086-0] 3GPP S.R0086-0: "IMS Security Framework". URL: http://www.3gpp2.org/

[OMA SEC] “OMA Application Layer Security Common Functions”, Version 1.0, Open Mobile Alliance™, URL: http://www.openmobilealliance.org/

[OMADICT] “Dictionary for OMA Specifications”, Version 2.7, Open Mobile Alliance™, OMA-ORG-Dictionary-V2_7, URL: http://www.openmobilealliance.org/

© 2009 Open Mobile Alliance Ltd. All Rights Reserved.
Used with the permission of the Open Mobile Alliance Ltd. under the terms as stated in this document.

3. Terminology and Conventions

3.1 Conventions

The key words “MUST”, “MUST NOT”, “REQUIRED”, “SHALL”, “SHALL NOT”, “SHOULD”, “SHOULD NOT”, “RECOMMENDED”, “MAY”, and “OPTIONAL” in this document are to be interpreted as described in [RFC2119].

All sections and appendixes, except “Scope” and “Introduction”, are normative, unless they are explicitly indicated to be informative.

3.2 Definitions

Candidate URI	Use definition from [CBUS_RD].
CBUS Client	Use definition from [CBUS_RD].
CBUS Server	Use definition from [CBUS_RD].
Charging	Use definition from [OMADICT].
Condition	Use definition from [CBUS_RD].
Enabler	Use definition from [OMADICT].
Entity	Use definition from [OMADICT].
Evaluation Information	Use definition from [CBUS_RD].
Evaluation Parameter	Use definition from [CBUS_RD].
Group	Use definition from [CBUS_RD].
Interface	Use definition from [OMADICT].
Management Object	Use definition from [OMADICT].
Principal	Use definition from [OMADICT].
Reference Point	Use definition from [OMADICT].
Request-contained Resource List	Use definition from [PRS_AD].
Resource	Use definition from [OMADICT].
Trusted XDMC	Use definition from [XDM_AD].
User	Use definition from [OMADICT].
User Equipment	Use definition from [CBUS_RD].
Watcher	Use definition from [PRS_AD].

3.3 Abbreviations

3GPP	3rd Generation Partnership Project
3GPP2	3rd Generation Partnership Project 2
CBUS	Condition Based URIs Selection
DM	Device Management
IMS	IP Multimedia Subsystem
IP	Internet Protocol
OMA	Open Mobile Alliance
RLS	Resource List Server

© 2009 Open Mobile Alliance Ltd. All Rights Reserved.
Used with the permission of the Open Mobile Alliance Ltd. under the terms as stated in this document.

SIC	SIP/IP Core
SIP	Session Initiation Protocol
	NOTE: The base Session Initiation Protocol is defined in [RFC3261].
UE	User Equipment
URI	Uniform Resource Identifier
XCAP	XML Configuration Access Protocol
XDM	XML Document Management
XDMC	XDM Client
XDMS	XDM Server
XML	eXtensible Markup Language

© 2009 Open Mobile Alliance Ltd. All Rights Reserved.
Used with the permission of the Open Mobile Alliance Ltd. under the terms as stated in this document.

4. Introduction (Informative)

This Architecture Document describes the architecture, i.e. the functional Entities, Interfaces and the Reference Points of the OMA CBUS Enabler.

The CBUS architecture re-uses the OMA Presence SIMPLE [PRS_AD], OMA XML Document Management [XDM_AD] and LOCSIP [LOCSIP_AD] Enablers to fulfill the requirements as defined in [CBUS_RD].

The purpose of the CBUS architecture is to provide a common callable interface for multiple OMA Enablers to retrieve URIs that match a set of Conditions applied by the service. Conditions may be specified as either ad-hoc conditions (i.e. which is not part of Group data and may vary per request) or pre-defined conditions (i.e. stored and referred to as part of Group data). The back-end of CBUS interfaces with a number of information sources, e.g. XDM and Presence SIMPLE Enablers in order to retrieve Evaluation Information, thus hiding their internal repository structure from the requestor. The ability of the CBUS Enabler to also aggregate evaluation of Conditions from different sources and return a single result simplifies the functionality of the requestor. The functional Entity that constitutes the CBUS Client of the CBUS architecture allows the requestor to be allocated to e.g. a mobile terminal or to a service specific server having access to the same CBUS functionality.

4.1 Version 1.0

The CBUS Version 1.0 architecture defines the following functional Entities:

- CBUS Server; and,
- CBUS Client.

The CBUS Version 1.0 architecture defines the Reference Point:

- CBUS-1, CBUS Client – CBUS Server.

The CBUS Client of the CBUS Version 1.0 architecture supports the following main functionality, as defined in [CBUS_RD]:

- interaction with the CBUS Server for Condition Based URIs Selection requests and responses.

The CBUS Server of the CBUS Version 1.0 architecture supports the following main functionality, as defined in [CBUS_RD]:

- authorization of CBUS Client requests;
- interaction with the CBUS Client for Condition Based URIs Selection requests and responses;
- retrieval of Evaluation Information; and,
- evaluation (and re-evaluation) of Candidate URIs' Evaluation Information against input Conditions.

© 2009 Open Mobile Alliance Ltd. All Rights Reserved.
Used with the permission of the Open Mobile Alliance Ltd. under the terms as stated in this document.

5. Architectural Model

This AD conforms to [OSE].

5.1 Dependencies

5.1.1 Collaboration with Evaluation Information sources

5.1.1.1 XDM Enabler

The CBUS Enabler retrieves Evaluation Information from the XDM Enabler. The XML documents stored in Shared Profile XDMS can be accessed using procedures defined in the XDM Enabler.

The CBUS Enabler is able to function as an XDMC in order to interact with the Shared Profile XDMS, as specified in [XDM_AD].

5.1.1.2 Presence Enabler

The CBUS Enabler retrieves Evaluation Information from the Presence Enabler. The Evaluation Information can be accessed using procedures defined in the Presence Enabler.

The CBUS Enabler is able to function as a Watcher in order to interact with the Presence Enabler, as specified in [PRS_AD].

5.1.1.3 LOCSIP Enabler

The CBUS Enabler retrieves Evaluation Information from the LOCSIP Enabler. The Evaluation Information can be accessed using procedures defined in the LOCSIP Enabler.

The CBUS Enabler is able to function as a Location Client in order to interact with the LOCSIP Enabler, as specified in [LOCSIP_AD].

5.1.2 Collaboration with XDM Enabler

The CBUS Enabler retrieves Group data from Shared Group XDMS of the XDM Enabler, e.g. members of the Group and pre-defined Conditions. The XML documents stored in Shared Group XDMS can be accessed using procedures defined in the XDM Enabler.

The CBUS Enabler is able to function as an XDMC in order to interact with the Shared Group XDMS, as specified in [XDM_AD].

5.2 Architectural Diagram

The following figure illustrates the OMA CBUS architecture.

© 2009 Open Mobile Alliance Ltd. All Rights Reserved.
Used with the permission of the Open Mobile Alliance Ltd. under the terms as stated in this document.

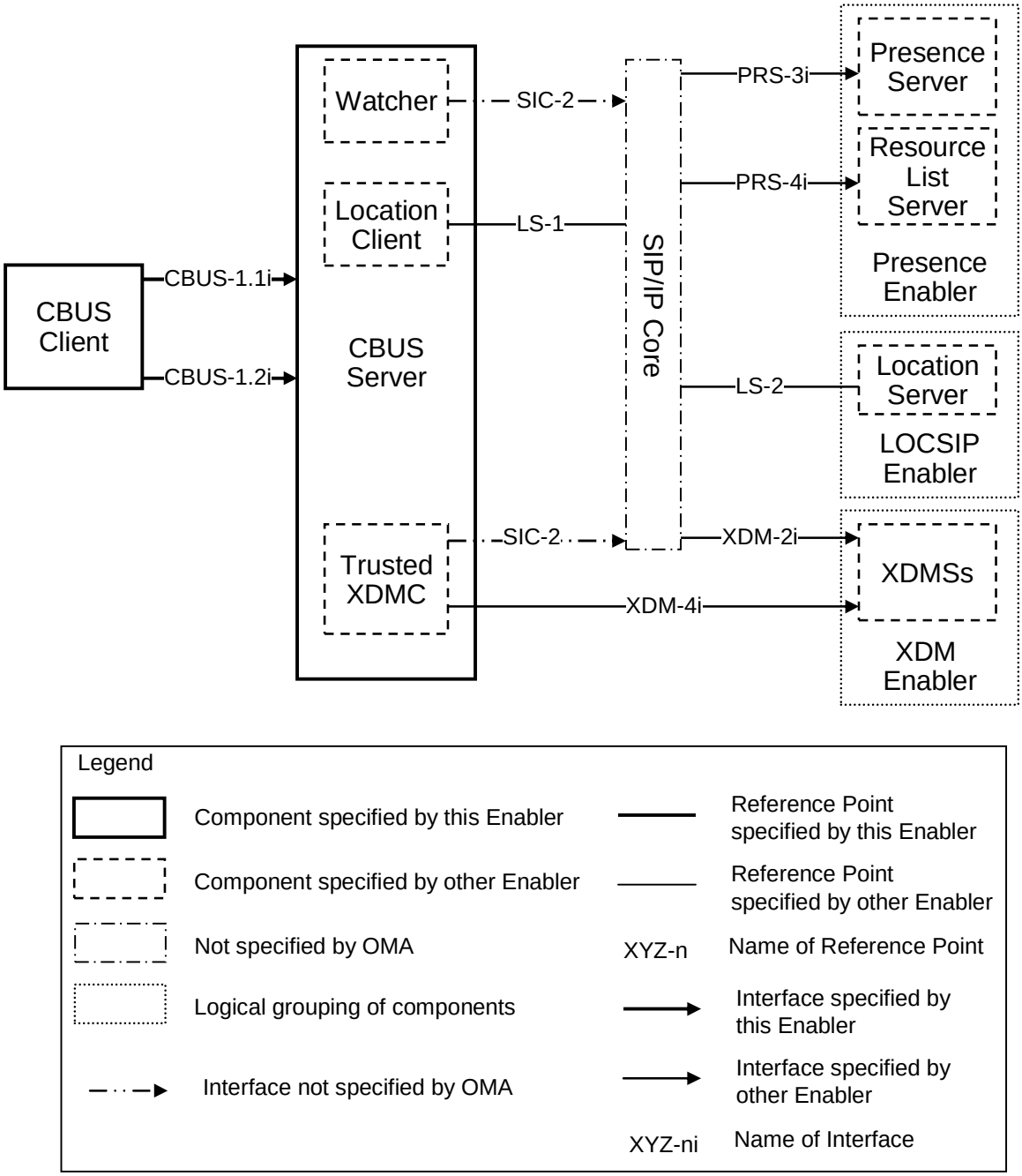

Figure 1: CBUS architecture (Interface view)

© 2009 Open Mobile Alliance Ltd. All Rights Reserved.
Used with the permission of the Open Mobile Alliance Ltd. under the terms as stated in this document.

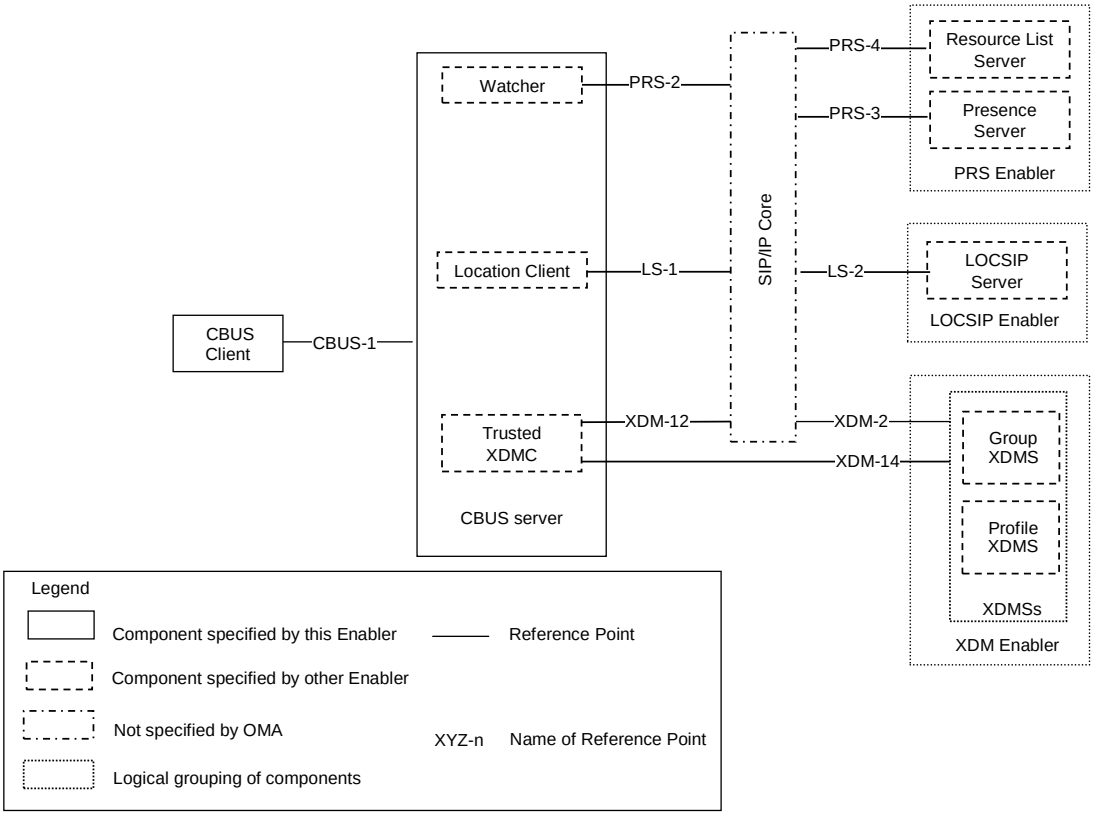

Figure 2: CBUS architecture (Reference Point view)

NOTE: In case SIP is used on CBUS-1 the SIP signaling goes via a SIP/IP Core network.

5.3 Functional Components and Interfaces/reference points definition

5.3.1 CBUS Functional Entities

This subclause describes the functional Entities of the CBUS Enabler.

5.3.1.1 CBUS Server

The CBUS Server receives condition-based URI selection requests, performs authorization of the condition-based URI selection requests, evaluates Conditions against the Evaluation Information retrieved from Evaluation Information Resources and sends condition-based URI selection responses.

The CBUS Server SHALL support the following functions:

- Capability Information Retrieval Function
- Authorization Function
- Condition Evaluation Function

© 2009 Open Mobile Alliance Ltd. All Rights Reserved.
Used with the permission of the Open Mobile Alliance Ltd. under the terms as stated in this document.

- Evaluation Information Retrieval Function

5.3.1.1.1 Capability Information Retrieval Function

The CBUS Server SHALL provide its capability information (e.g. its capability to retrieve Evaluation Information of different information types) to any authorized Principal (e.g. CBUS Client) in the response to a condition-based URI selection capability request.

5.3.1.1.2 Authorization Function

The CBUS Server SHALL perform an authorization check on incoming requests, i.e. condition-based URI selection capability request and condition-based URI selection request.

5.3.1.1.3 Evaluation Information Retrieval Function

The CBUS Server SHALL perform the Evaluation Information Retrieval Function based on the information received in the condition-based URI selection request. The Evaluation Information Retrieval Function SHALL include the following sub functions:

- sending an Evaluation Information Retrieval request to each target resource from which Evaluation Information is needed based on the Conditions received, e.g. to Presence and LOCSIP Enablers, for each of the Candidate URIs received with information elements, such as
    - presence status information;
    - location-based information;
    - user profile information
- requesting to be notified of changes of the Evaluation Information from each Enabler in a certain time period if re-evaluation is specified in the Evaluation Parameter received in condition-based URI selection request;
- aggregating the Evaluation Information retrieved from multiple information sources;
- handling and reporting failures occurred while retrieving Evaluation Information.

The CBUS Server SHALL act as a

- Location Client according to [LOCSIP_AD] to be able to request location information for Candidate URIs, i.e. to retrieve Evaluation Information about targets.
- Watcher according to [PRS_AD] to be able to request presence information for Candidate URIs, i.e. to retrieve Evaluation Information about Presentities.
- XDMC according to [XDM_AD] to be able to request profile information for Candidate URIs, i.e. to retrieve profile information about users.

5.3.1.1.4 Conditions Evaluation Function

The CBUS Server SHALL based on the information received in the URI selection request evaluate the Conditions against the Evaluation Information received from the resources, e.g. from the Presence Server to define the Candidate URIs matching the Conditions.

The CBUS Server SHALL perform Conditions evaluation based on received Evaluation Information for the Candidate URIs as follows:

a. If one-time evaluation is requested, the CBUS Server SHALL perform Condition evaluation for selection of URIs once and return the Selected URIs to the CBUS Client.

© 2009 Open Mobile Alliance Ltd. All Rights Reserved.
Used with the permission of the Open Mobile Alliance Ltd. under the terms as stated in this document.

b. If periodic re-evaluation is requested for a certain time period, the CBUS Server SHALL perform Condition evaluation for selection of URIs periodically and return the Selected URIs to the CBUS Client likewise during the time period requested.

c. If re-evaluation when the Evaluation Information changes is requested for a certain time period, the CBUS Server SHALL perform a one-time evaluation and return the Selected URIs to the CBUS Client and thereafter notify the CBUS Client about any changes to Selected URIs during the time period requested.

- The CBUS Server SHALL return a list of URIs matching the Conditions to the CBUS Client when an evaluation result is available.

5.3.1.2 CBUS Client

The CBUS Client provides access to various features of a CBUS Server, as described in section 5.3.1.1.

The CBUS Client SHALL support the following functions:

- Requests URI selection;

The CBUS Client MAY support the following functions:

- Requests CBUS Server for its capabilities to retrieve different types of Evaluation Information and to support different evaluation types, e.g. one-time evaluation and periodic re-evaluation.

5.3.2 Description of Interfaces

5.3.2.1 CBUS-1.1i Interface

The CBUS-1.1i interface is exposed by the CBUS Server and is used by authorized Principals, e.g. the CBUS Client to make a condition-based URI selection capability request.

The CBUS Server SHALL process the condition-based URI selection capability request and return condition-based URI selection capability response.

The CBUS-1.1i interface SHALL support the following parameters in the condition-based URI selection capability response:

- evaluation information types supported by the CBUS server
- evaluation types supported by the CBUS server, e.g. one-time evaluation and periodic re-evaluation

5.3.2.2 CBUS-1.2i Interface

The CBUS-1.2i interface is exposed by the CBUS Server and is used by authorized Principals, e.g. CBUS Client to make condition-based URI selection requests and receive condition-based URI selection responses.

The CBUS Server SHALL process the condition-based URI selection request and return condition-based URI selection responses.

The CBUS-1.2i interface SHALL support the following parameters in the condition-based URI selection request:

- A list of Candidate URIs, e.g. SIP URIs of Users
- Conditions to be matched for each URI in order to be selected, e.g. a list of filter criteria for when notification is to be sent, i.e. the Conditions for the Presence and location elements to be evaluated
- Evaluation Parameters, which
    - MAY include the maximum and/or minimum number of Selected URIs to match the Conditions.
    - SHALL include one of following evaluation types:
        - One time evaluation (i.e. in SIP: duration of the subscription set to zero);
        - Periodic re-evaluation;
            - Time duration of the repetitive evaluation of the Conditions for URI selection;
            - The interval between re-evaluation of the Conditions for URI selection.

© 2009 Open Mobile Alliance Ltd. All Rights Reserved.
Used with the permission of the Open Mobile Alliance Ltd. under the terms as stated in this document.

- Re-evaluation when the Evaluation Information changed.
  - Time duration of the repetitive evaluation of the Conditions for URI selection;
    The interval between re-evaluation of the Conditions for URI selection.

The CBUS-1.2i interface SHALL support the following parameters in the condition-based URI selection response:

- a list of URIs matching the Conditions as evaluation result

5.3.3 Description of the Reference Points

5.3.3.1 Reference Point CBUS-1: CBUS Client – CBUS Server

The CBUS-1 Reference Point supports the communication between the CBUS Client and CBUS Server

The CBUS-1 Reference Point consists of the CBUS-1.1i and CBUS-1.2i Interfaces.

5.3.3.2 Reference Points specified by other Enablers

5.3.3.2.1 Reference Point XDM-2: XDMSs – SIP/IP Core

The functionality and Interfaces of the XDM-2 Reference Point is described in [XDM_AD].

5.3.3.2.2 Reference Point XDM-12: Trusted XDMC – SIP/IP Core

The functionality and Interfaces of the XDM-12 Reference Point are described in [XDM_AD].

5.3.3.2.3 Reference Point XDM-14: Trusted XDMC – XDMSs

The functionality and Interfaces of the XDM-14 Reference Point are described in [XDM_AD].

5.3.3.2.4 Reference Point PRS-2: Watcher SIP/IP Core

The functionality and Interfaces of the PRS-2 Reference Point are described in [PRS_AD].

5.3.3.2.5 Reference Point PRS-3: SIP/IP Core – Presence Server

The functionality and Interfaces of the PRS-3 Reference Point are described in [PRS_AD].

5.3.3.2.6 Reference Point PRS-4: SIP/IP Core – Resource List Server

The functionality and Interfaces of the PRS-4 Reference Point are described in [PRS_AD].

5.3.3.2.7 Reference Point LS-1: Location Client – SIP/IP Core

The functionality of the LS-1 Reference Point is described in [LOCSIP_AD].

5.3.3.2.8 Reference Point LS-2: SIP/IP Core – Location Server

The functionality of the LS-2 Reference Point is described in [LOCSIP_AD].

5.4 CBUS over 3GPP/3GPP2 IMS

The following figure illustrates the CBUS enabler over an IMS.

© 2009 Open Mobile Alliance Ltd. All Rights Reserved.
Used with the permission of the Open Mobile Alliance Ltd. under the terms as stated in this document.

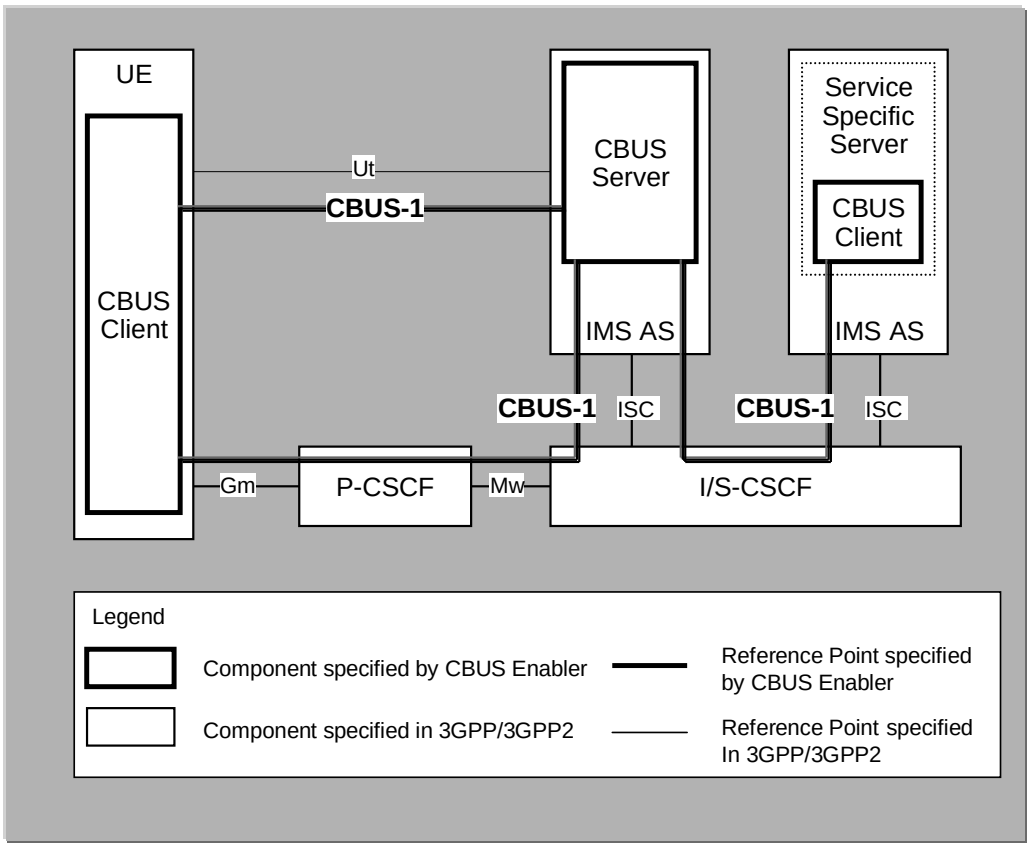

Figure 3 CBUS Enabler over 3GPP/3GPP2 IMS

When the CBUS Enabler is realized over IMS, the CBUS Server utilizes the capabilities of IMS as specified in 3GPP [3GPP-TS_23.228] and 3GPP2 [3GPP2-X.S0013-002], respectively. In such cases the IMS Core performs the following additional functions in support of the CBUS Service via IMS Reference Points as specified in [3GPP-TS_23.002] [3GPP2-X.S0013-002]:

- Routes the SIP messages between the CBUS Client supporting SIP and the CBUS Server via Gm and/or ISC reference point;
- Provides discovery and address resolution services via Gm Reference Point;
- Supports signalling compression on Gm and Ut Reference Point;
- Performs Authentication via Gm Reference Point;
- Performs a certain type of authorization of the CBUS Client based on User's service profile via Gm and Ut Reference Point;
- Maintains the registration state;
- Provides charging information.
- Forwarding of SIP signalling messages between IMS Cores via the Mw or Ici Reference Points.

Mapping of OMA Reference Points to IMS Reference Points:

© 2009 Open Mobile Alliance Ltd. All Rights Reserved.
Used with the permission of the Open Mobile Alliance Ltd. under the terms as stated in this document.

IMS Reference Point	OMA Reference Point
Ut	CBUS-1 (for http based CBUS Clients implemented in UE)
Gm	CBUS-1 (for SIP based CBUS Clients implemented in UE)
ISC	CBUS-1 (for SIP based CBUS Clients implemented in UE or Service Specific Servers),

5.5 Security Considerations

The CBUS Enabler permits mutual authentication, confidentiality and integrity protection as deployed by the service provider for message exchanges between CBUS Client and CBUS Server.

Common application layer security mechanisms are described in [OMA SEC].

In the case the underlying network is a 3GPP/3GPP2 IMS the security mechanisms, such as mutual authentication and integrity protection are performed according to rules and procedures as described in [3GPP TS 33.203]/[3GPP2 S.R0086-0].

Furthermore, additional security mechanisms are described in the following Enabler specifications which CBUS depends on:

- Presence Enabler in [PRS_AD]
- LOCSIP Enabler in [LOCSIP_AD]
- XDM Enabler [XDM_AD].

© 2009 Open Mobile Alliance Ltd. All Rights Reserved.
Used with the permission of the Open Mobile Alliance Ltd. under the terms as stated in this document.

Appendix A. Change History (Informative)

A.1 Approved Version History

Reference	Date	Description
n/a	n/a	No prior version

A.2 Draft/Candidate Version 1.0 History

Document Identifier	Date	Sections	Description
Draft Versions OMA-AD-CBUS-V1_0	23 Jul 2008	n/a	AD skeleton based on OMA-Template-ArchDoc-20080710-I
	28 Oct 2008	2.1, 3.2, 3.3, 5.2, 5.3	Incorporated CRs: OMA-PAG-CBUS-2008-0041R01 OMA-PAG-CBUS-2008-0042R01
	31 Oct 2008	2.1, 3.1, 3.2, 3.3, 5.1	Incorporated CR: OMA-PAG-CBUS-2008-0040
	09 Feb 2009	2.1, 3.2	Incorporated CRs: OMA-PAG-CBUS-2009-0003-CR_CBUS1_0_AD_amending_denfinitions.zip
	09 Feb 2009	2.1, 5.2, 5.3	Incorporated CRs: OMA-PAG-CBUS-2009-0001R02-CR_CBUS1_0_AD_amending_architecture_diagram OMA-PAG-CBUS-2009-0002R01-CR_CBUS1_0_AD_amending_reference_points
	23 Mar 2009	2.1, 2.2, 3.2, 3.3, 4, 5.1, 5.2, 5.3	Incorporated CRs: OMA-PAG-CBUS-2009-0004-CR_CBUSV1.0_AD_RLS_usage_for_CBUS OMA-PAG-CBUS-2009-0006R02-CR_CBUSV1.0_AD_adding_scope_in_1 OMA-PAG-CBUS-2009-0007R01-CR_CBUSV1.0_AD_adding_intro_and_version_text_in_4_and_4.1 OMA-PAG-CBUS-2009-0008R01-CR_CBUSV1.0_AD_solving_ENs_in_5.3.1 OMA-PAG-CBUS-2009-0009R01-CR_CBUSV1.0_AD_solving_EN_in_5.3.2 OMA-PAG-CBUS-2009-0010R01-CR_CBUSV1.0_AD_adding_dependencies_in_5.1 OMA-PAG-CBUS-2009-0013-CR_AD_adding_an_EN_for_charging OMA-PAG-CBUS-2009-0014-CR_CBUSV1.0_AD_adding_registration_of_CBUS_client
	24 Mar 2009	3, 5	Editorial clean-up
	01 Apr 2009	5.4, 5.5	Incorporated CRs: OMA-PAG-CBUS-2009-0012R01-CR_CBUSV1.0_AD_adding_basic_flows_for_one_time_evaluation_in_5.4 OMA-PAG-CBUS-2009-0011R01-CR_CBUSV1.0_AD_adding_security_in_5.5
	26 Apr 2009	All	Incorporated CR: OMA-PAG-CBUS-2009-0018R01-CR_CBUS_AD_solving_minor_comments.zip
	11 May 2009	5.3	Incorporated CR: OMA-PAG-CBUS-2009-0020-CR_CBUS_V1_0_ADRR_A126

© 2009 Open Mobile Alliance Ltd. All Rights Reserved.
Used with the permission of the Open Mobile Alliance Ltd. under the terms as stated in this document.

Document Identifier	Date	Sections	Description
	27 May 2009	2.1, 3.2, 4, 5.1, 5.2, 5.3	Incorporated CRs: OMA-PAG-CBUS-2009-0021R02-CR_CBUSV1.0_AD_solving_A016_A049_A050_A052 OMA-PAG-CBUS-2009-0023-CR_CBUS_1.0_ADRR_A002_A041_A063_A067_A070_A110_A111 OMA-PAG-CBUS-2009-0025R01-CR_CBUS_V1_0_ADRR_A043
	03 Jun 2009	4.1, 5.1; 5.3, B.1, B.2	Incorporated CRs: OMA-PAG-CBUS-2009-0022R02-CR_CBUSV1.0_AD_solving_A088_A090_A091 OMA-PAG-CBUS-2009-0028-CR_CBUS_1.0_ADRR_A047_A048 OMA-PAG-CBUS-2009-0030R02-CR_CBUS_1.0_ADRR_A054_A056 OMA-PAG-CBUS-2009-0031R01-CR_CBUS_1.0_ADRR_A113 OMA-PAG-CBUS-2009-0032-CR_CBUS_1.0_ADRR_A123_A124 OMA-PAG-CBUS-2009-0034R04-CR_CBUSV1.0_AD_solving_A135_A139_A141 OMA-PAG-CBUS-2009-0036R04-CR_CBUSV1.0_AD_solving_A142_A143_A144_A145
	15 Jun 2009	3.2, 5, 5.2, 5.3, App B	Incorporated CR: OMA-PAG-CBUS-2009-0017R05-CR_To_CBUS_AD_on_CBUS_server_and_Interfaces Editorial bugs fixed
	23 Jun 2009	2.2, 3.2 3.3, 5.1, 5.2, 5.3, 5.4, Appendix C	Incorporated CRs: OMA-PAG-CBUS-2009-0033R02-CR_CBUS_1.0_ADRR_A149 OMA-PAG-CBUS-2009-0043-CR_CBUSV1.0_AD_solving_A115_A118_A121_A122 OMA-PAG-CBUS-2009-0045R01-CR_CBUSV1.0_AD_solving_A080_A108_A109_A127 OMA-PAG-CBUS-2009-0048-CR_CBUSV1.0_AD_solving_A60_A061_A062_A069_A079 OMA-PAG-CBUS-2009-0050R01-CR_CBUS_1.0_ADRR_A103
	24 Jun 2009	2.1, 3.2, 4, 4.1,5.3 5.4, 6.3, Appendix B	OMA-PAG-CBUS-2009-0046R02-CR_CBUS_1.0_ADRR_A105_A106_A129_A130_A131 OMA-PAG-CBUS-2009-0047R01-CR_CBUS_1.0_ADRR_A136_A137_A138 OMA-PAG-CBUS-2009-0049R04-CR_CBUSV1.0_AD_solving_many_ADRR_comments
	25 Jun 2009	5.1.2	Incorporated CR: OMA-PAG-CBUS-2009-0051-CR_CBUSV1.0_AD_solving_remaining_ADRR_comments
	30 Jun 2009	5.4	Editorial correction Figure 3
	01 Jul 2009	1st page, 3.2, App A	Editorial clean-up by DSO
	25 Aug 2009	3.2, 4.1, 5.1, 5.3.3, 5.5	Incorporated CR: OMA-PAG-CBUS-2009-0052R01-CR_CBUSV1.0_AD_final_fixes
Draft Version OMA-AD-CBUS-V1_0	27 Aug 2009	All	General editorial clean-up by DSO prior to Candidate approval Correction in the history box of the CR number incorporated on 25 August 2009
Candidate Version OMA-AD-CBUS-V1_0	22 Sep 2009	N/A	Status changed to Candidate by TP TP ref # OMA-TP-2009-0413-INP_CBUS_V1_0_AD_for_Candidate_approval

© 2009 Open Mobile Alliance Ltd. All Rights Reserved.
Used with the permission of the Open Mobile Alliance Ltd. under the terms as stated in this document.

Appendix B. Flows (informative)

The following subsections describe the high-level procedures for the information flow between involved functional Entities of the CBUS architecture to provide the features supported by the CBUS Enabler.

B.1 Selecting Group Members based on Simple Conditions and One-time Evaluation

This section shows the flows when a User with a CBUS Client requests for a selection of members based on one-time evaluation and by providing a list of Candidate URIs and Conditions for selecting members based only on presence information.

The section B.1.1 "*Selecting Group members when Request-contained Resource Lists is not supported*" describes the flow when CBUS Server retrieves Evaluation Information using one subscription for each Candidate URI. The section B.1.2 "*Selecting Group members using Request-contained Resource Lists*" describes the flow when CBUS Server retrieves Evaluation Information using one subscription for a multiple of Candidate URIs.

B.1.1 Selecting Group members when Request-contained Resource Lists is not supported

The Figure 4 shows the flow when a User with a CBUS Client requests for a selection of members where the CBUS Server retrieves Evaluation Information by initiating a subscription to Evaluation Information for each Candidate URI. The CBUS Server can use this procedure e.g. when RLS as described in [PRS_AD] is not deployed in the network in the context of presence or when the CBUS Server does not support subscription to Request-contained Resource Lists.

© 2009 Open Mobile Alliance Ltd. All Rights Reserved.
Used with the permission of the Open Mobile Alliance Ltd. under the terms as stated in this document.

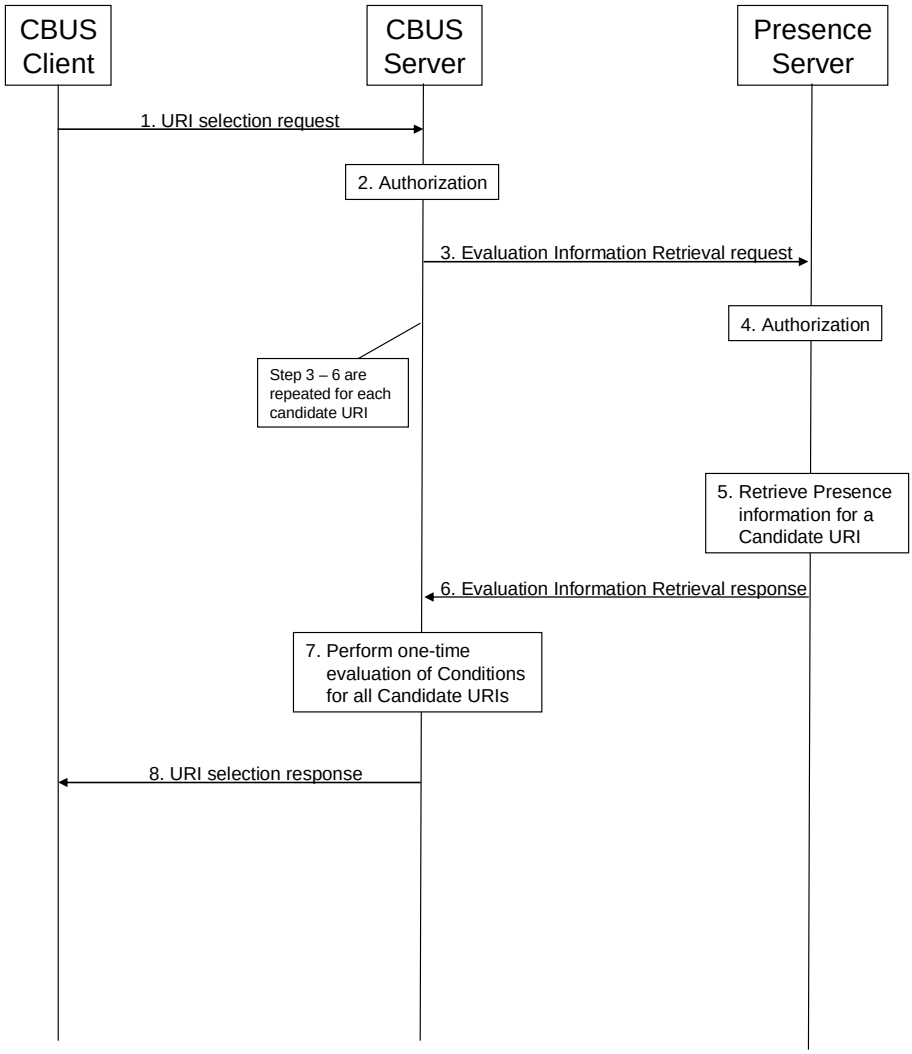

Figure 4: Selecting Group members based on simple Conditions and one-time evaluation when not using RLS

1. A CBUS Client that wants to retrieve Users matching a set of Conditions based on a one-time evaluation of Presence information sends a URI selection request to the CBUS Server with the following information elements:
   a. A list of SIP URIs of the Users, i.e. of the Candidate URIs
   b. A list of Conditions based on Presence information to be evaluated
   c. The Evaluation Parameter indicates that this is a one-time evaluation, i.e. the duration of the subscription is set to zero
2. The CBUS Server performs an authorization check of the CBUS Client request.
3. The CBUS Server identifies that the Conditions are based on Presence information. The CBUS Server sends a Evaluation Information Retrieval request on behalf of the CBUS Client to the Presence Server for each of the Candidate URIs received and with the following information elements:

© 2009 Open Mobile Alliance Ltd. All Rights Reserved.
Used with the permission of the Open Mobile Alliance Ltd. under the terms as stated in this document.

a. The SIP URI of the User, i.e. of the Candidate URI received from the CBUS Client

b. The list of filter criteria for Evaluation Information of type Presence information based on the received Conditions

c. The indication that this is a one-time evaluation, i.e. the duration of the subscription is set to zero

NOTE: Step 3 – 6 are repeated for each Candidate URI received from the CBUS Client (not shown in the figure).

4. The Presence Server performs an authorization check of the CBUS Server request to verify that the originator, i.e. the CBUS Client is allowed to request the Presence information.

5. The Presence Server retrieves the Presence information related to the list of filter criteria received from the CBUS Server and allowed according to the authorization check for the Presentity corresponding to the Candidate URI received.

6. The Presence Server sends an Evaluation Information Retrieval response with Presence information to the CBUS Server.

7. The CBUS Server evaluates the Conditions against the Evaluation Information received in the response from the Presence Server in order to define the Candidate URIs matching the Conditions.

8. The CBUS Server sends a URI selection response to the CBUS Client with the following information elements:

   a. A list of SIP URI of the Users matching the Conditions

B.1.2 Selecting Group members using Request-contained Resource Lists

The Figure 5 shows the flow when a User with a CBUS Client requests for a selection of members where the CBUS Server retrieves Evaluation Information by initiating a subscription to Evaluation Information for a multiple of Candidate URIs. The CBUS Server can use this procedure e.g. when RLS as described in [PRS_AD] is deployed in the network in the context of presence and the CBUS Server supports subscription to Request-contained Resource Lists.

© 2009 Open Mobile Alliance Ltd. All Rights Reserved.
Used with the permission of the Open Mobile Alliance Ltd. under the terms as stated in this document.

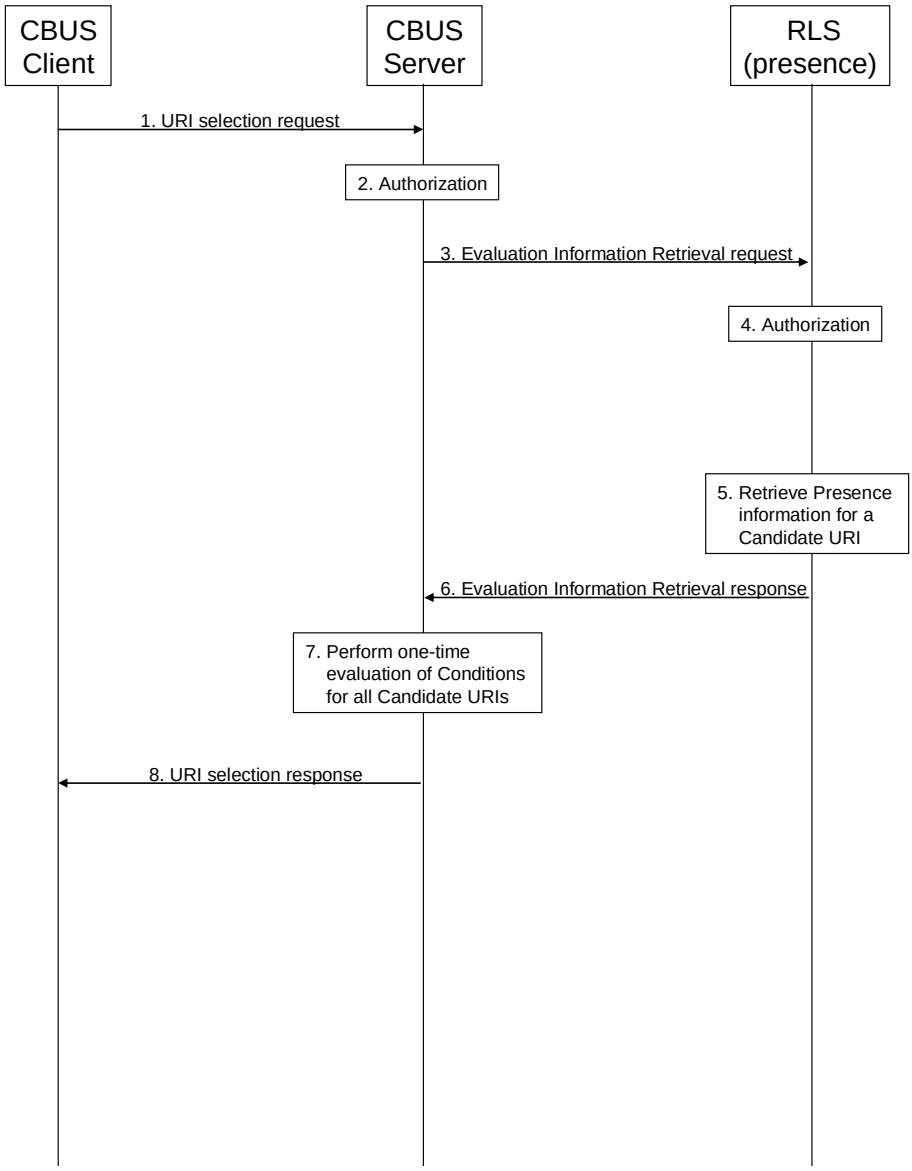

Figure 5: Selecting Group members based on simple Conditions and one-time evaluation when using RLS

1. A CBUS Client that wants to retrieve Users matching a set of Conditions based on a one-time evaluation of Presence information sends a URI selection request to the CBUS Server with the following information elements:
   a. A list of SIP URIs of the Users, i.e. of the Candidate URIs
   b. A list of Conditions based on Presence information to be evaluated
   c. The Evaluation Parameter indicates that this is a one-time evaluation, i.e. the duration of the subscription is set to zero
2. The CBUS Server performs an authorization check of the CBUS Client request.

© 2009 Open Mobile Alliance Ltd. All Rights Reserved.
Used with the permission of the Open Mobile Alliance Ltd. under the terms as stated in this document.

3. The CBUS Server identifies that the Conditions are based on Presence information. The CBUS Server sends an Evaluation Information Retrieval request on behalf of the CBUS Client to the RLS (in the context of presence) for the multiple of Candidate URIs received and with the following information elements:
    a. The Request-contained Resource List that includes the SIP URIs of the Users, i.e. the Candidate URI received from the CBUS Client
    b. The list of filter criteria for Evaluation Information of type Presence information based on the received Conditions
    c. The indication that this is a one-time evaluation, i.e. the duration of the subscription is set to zero
4. The RLS (in the context of presence) performs an authorization check of the CBUS Server request to verify that the originator, i.e. the CBUS Client is allowed to request the Presence information.
5. The RLS (in the context of presence) retrieves the Presence information related to the list of filter criteria received from the CBUS Server and allowed according to the authorization check for the Presentities corresponding to the Candidate URIs received.
6. The RLS (in the context of presence) sends an Evaluation Information Retrieval response with the Presentities Presence information to the CBUS Server.
7. The CBUS Server evaluates the Conditions against the Evaluation Information received in the response from the RLS in order to define the Candidate URIs matching the Conditions.
8. The CBUS Server sends a URI selection response to the CBUS Client with the following information elements:
    a. A list of SIP URI of the Users matching the Conditions

B.2 Selecting Group Members based on Combined Conditions and One-time Evaluation

This section shows the flows when a User with a CBUS Client requests for a selection of members based on one-time evaluation and by providing a list of Candidate URIs and Conditions for selecting members based on a combination of presence information and location information.

The section B.2.1 "*Selecting Group members when Request-contained Resource Lists is not supported*" describes the flow when CBUS Server retrieves one type of Evaluation Information using one subscription for each Candidate URI. The section B.2.2"*Selecting Group members using Request-contained Resource Lists*" describes the flow when CBUS Server retrieves one type of Evaluation Information using one subscription for a multiple of Candidate URIs.

B.2.1 Selecting Group members when Request-contained Resource Lists is not supported

The Figure 6 shows the flow when a User with a CBUS Client requests for a selection of members where the CBUS Server retrieves Evaluation Information by initiating a subscription to Evaluation Information for each Candidate URI and type of Evaluation Information. The CBUS Server uses this procedure e.g. when RLS as described in [PRS_AD] is not deployed in the network neither for presence information nor for location information or when the CBUS Server does not support subscription to Request-contained Resource Lists.

© 2009 Open Mobile Alliance Ltd. All Rights Reserved.
Used with the permission of the Open Mobile Alliance Ltd. under the terms as stated in this document.

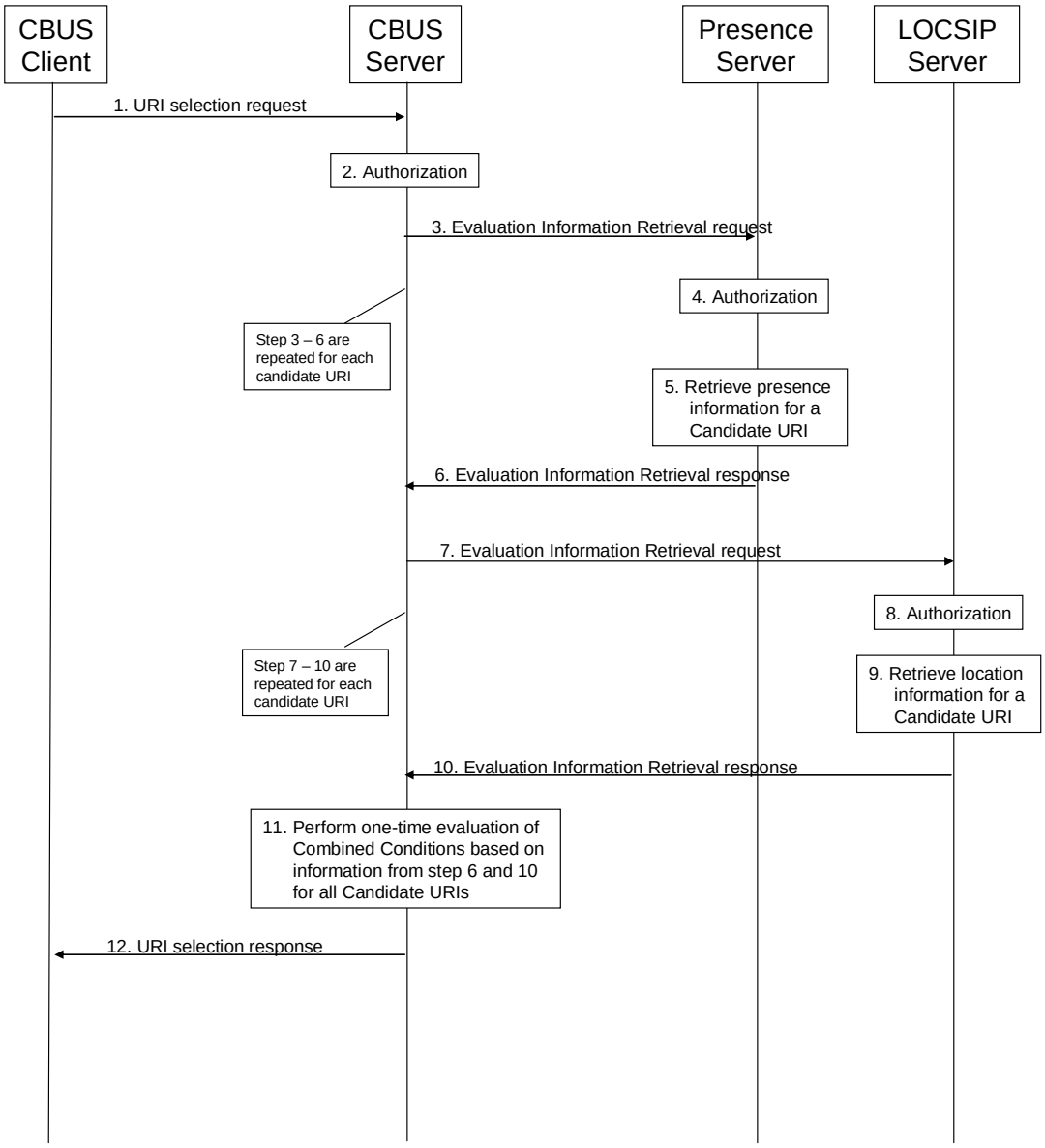

Figure 6: Selecting Group members based on combined Conditions and one-time evaluation when not using RLS

1. A CBUS Client that wants to retrieve the Users matching a set of Conditions based on a one-time evaluation of a combination of Presence information and location information sends a URI selection request to the CBUS Server with the following information elements:

   a. A list of SIP URIs of the Users, i.e. of the Candidate URIs

   b. A list of Conditions based on Presence and location information to be evaluated

   c. The Evaluation Parameter indicates that this is a one-time evaluation, i.e. the duration of the subscription is set to zero

2. The CBUS Server performs an authorization check of the CBUS Client request.

© 2009 Open Mobile Alliance Ltd. All Rights Reserved.
Used with the permission of the Open Mobile Alliance Ltd. under the terms as stated in this document.

3. The CBUS Server identifies that the Conditions are based on a combination of Presence information and location information and that Evaluation Information has to be retrieved from both Presence and LOCSIP services. The CBUS Server sends an Evaluation Information Retrieval request on behalf of the CBUS Client to the Presence Server for each of the Candidate URIs received and with the following information elements:
   a. The SIP URI of the User, i.e. of the Candidate URI received from the CBUS Client
   b. The list of filter criteria for Evaluation Information of type Presence information based on the received Conditions
   c. The indication that this is a one-time evaluation, i.e. the duration of the subscription is set to zero

   NOTE: Step 3 – 6 are repeated for each Candidate URI received from the CBUS Client (not shown in the figure).

4. The Presence Server performs an authorization check of the CBUS Server request to verify that the originator, i.e. the CBUS Client is allowed to request the Presence information.
5. The Presence Server retrieves the Presence information related to the list of filter criteria received from the CBUS Server and allowed according to the authorization check for the Presentity corresponding to the Candidate URIreceived.
6. The Presence Server sends an Evaluation Information Retrieval response with Presence information to the CBUS Server.
7. The CBUS Server has identified that the Conditions are based on a combination of Presence information and location information. The CBUS Server sends an Evaluation Information Retrieval request on behalf of the CBUS Client to the LOCSIP Server for each of the Candidate URIs received and with the following information elements:
   a. The SIP URI of the User, i.e. of the Candidate URI received from the CBUS Client
   b. The list of filter criteria for Evaluation Information of type location information based on the received Conditions
   c. The indication that this is a one-time evaluation, i.e. the duration of the subscription is set to zero

   NOTE: Step 7 – 10 are repeated for each Candidate URI received from the CBUS Client (not shown in the figure).

8. The LOCSIP Server performs an authorization check of the CBUS Server request to verify that the originator, i.e. the CBUS Client is allowed to request the location information.
9. The LOCSIP Server retrieves the location information related to the list of filter criteria received from the CBUS Server and allowed according to the authorization check for the Target corresponding to the Candidate URIreceived.
10. The LOCSIP Server sends an Evaluation Information Retrieval response with location information to the CBUS Server.
11. The CBUS Server evaluates the Conditions against the Evaluation Information received in the responses from the Presence Server and the LOCSIP Server in order to define the Candidate URIs matching the combined Conditions.
12. The CBUS Server sends a URI selection response to the CBUS Client with the following information elements:
    a. A list of SIP URIs of the Users matching the combined Conditions

B.2.2 Selecting Group members using Request-contained Resource Lists

The Figure 7 shows the flow when a User with a CBUS Client requests for a selection of members where the CBUS Server retrieves Evaluation Information by initiating a subscription to Evaluation Information for a multiple of Candidate URIs and per type of Evaluation Information. The CBUS Server can use this procedure e.g. when RLS as described in [PRS_AD] is deployed in the network in the context of presence and location and the CBUS Server supports subscription to Request-contained Resource Lists.

© 2009 Open Mobile Alliance Ltd. All Rights Reserved.
Used with the permission of the Open Mobile Alliance Ltd. under the terms as stated in this document.

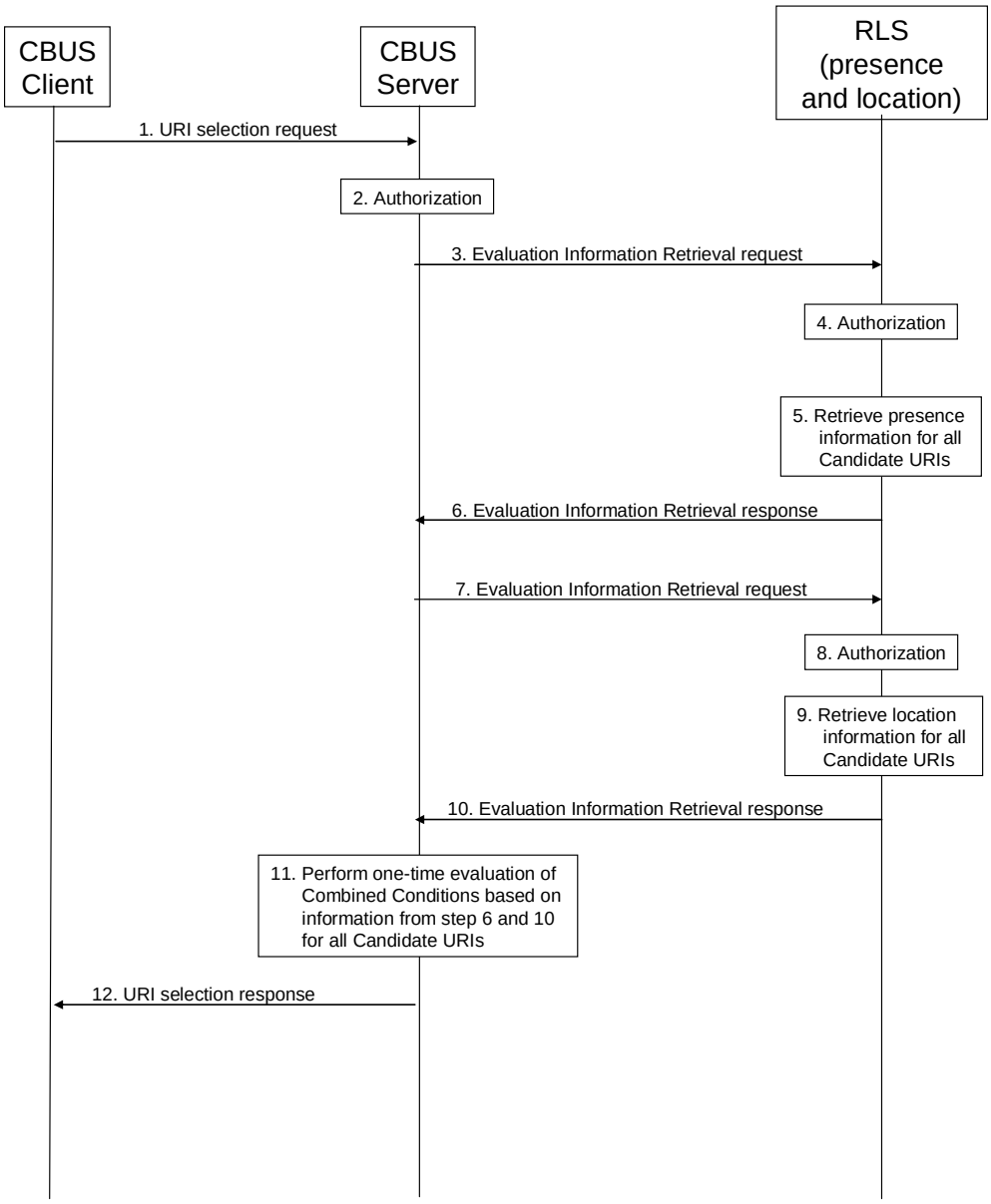

Figure 7: Selecting Group members based on combined conditions and one-time evaluation when using RLS

1. A CBUS Client that wants to retrieve the Users matching a set of Conditions based on a one-time evaluation of a combination of Presence information and location information sends a URI selection request to the CBUS Server with the following information elements:

   a. A list of SIP URIs of the Users, i.e. of the Candidate URIs

   b. A list of Conditions based on Presence and location information to be evaluated

   c. The Evaluation Parameter indicates that this is a one-time evaluation, i.e. the duration of the subscription is set to zero

2. The CBUS Server performs an authorization check of the CBUS Client request.

© 2009 Open Mobile Alliance Ltd. All Rights Reserved.
Used with the permission of the Open Mobile Alliance Ltd. under the terms as stated in this document.

3. The CBUS Server identifies that the Conditions are based on a combination of Presence information and location information and that Evaluation Information has to be retrieved from both Presence and LOCSIP services. The CBUS Server sends an Evaluation Information Retrieval request on behalf of the CBUS Client to the RLS (in the context of presence) for the multiple of Candidate URIs received and with the following information elements:
   a. The Request-contained Resource List that includes the SIP URIs of the Users, i.e. of the Candidate URIs received from the CBUS Client
   b. The list of filter criteria for Evaluation Information of type Presence information based on the received Conditions
   c. The indication that this is a one-time evaluation, i.e. the duration of the subscription is set to zero
4. The RLS (in the context of presence) performs an authorization check of the CBUS Server request to verify that the originator, i.e. the CBUS Client is allowed to request the Presence information.
5. The RLS (in the context of presence) retrieves the Presence information related to the list of filter criteria received from the CBUS Server and allowed according to the authorization check for all Presentities corresponding to the list of Candidate URIs received.
6. The RLS (in the context of presence) sends an Evaluation Information Retrieval response with Presence information to the CBUS Server.
7. The CBUS Server has identified that the Conditions are based on a combination of Presence information and location information. The CBUS Server sends an Evaluation Information Retrieval request on behalf of the CBUS Client to the LOCSIP Server for the multiple of Candidate URIs received and with the following information elements:
   a. The Request-contained Resource List that includes the SIP URIs of the Users, i.e. of the Candidate URIs received from the CBUS Client
   b. The list of filter criteria for Evaluation Information of type location information based on the received Conditions
   c. The indication that this is a one-time evaluation, i.e. the duration of the subscription is set to zero
8. The RLS (in the context of location) performs an authorization check of the CBUS Server request to verify that the originator, i.e. the CBUS Client is allowed to request the location information.
9. The RLS (in the context of location) retrieves the location information related to the Conditions received from the CBUS Server and allowed according to the authorization check for all Targets corresponding to the list of Candidate URIs received.
10. The RLS (in the context of location) sends an Evaluation Information Retrieval response with location information to the CBUS Server.
11. The CBUS Server evaluates the Conditions against the Evaluation Information received in the responses from the RLS (in the context of presence and location) in order to define the Candidate URIs matching the combined Conditions.
12. The CBUS Server sends a URI selection response to the CBUS Client with the following information elements:
    a. A list of SIP URIs of the Users matching the combined Conditions

B.3 Selecting Group Members based on simple Conditions and re-evaluation when the Evaluation Information changed

This section shows the flows when a User with a CBUS Client requests for a selection of members based on re-evaluation when the Evaluation Information changed and by providing a list of Candidate URIs and Conditions for selecting members based only on presence information.

© 2009 Open Mobile Alliance Ltd. All Rights Reserved.
Used with the permission of the Open Mobile Alliance Ltd. under the terms as stated in this document.

The section B.1.1B.3.1 "*Selecting Group members when Request-contained Resource Lists is not supported*" describes the flow when CBUS Server retrieves Evaluation Information using one subscription for each Candidate URI. The section B.3.2 "*Selecting Group members using Request-contained Resource Lists*" describes the flow when CBUS Server retrieves Evaluation Information using one subscription for a multiple of Candidate URIs.

B.3.1 Selecting Group members when Request-contained Resource Lists is not supported

The Figure 8 shows the flow when a User with a CBUS Client requests for a dynamic selection of members where the CBUS Server retrieves Evaluation Information by initiating a subscription to Evaluation Information for each Candidate URI. The CBUS Server can use this procedure e.g. when RLS as described in [PRS_AD] is not deployed in the network in the context of presence or when the CBUS Server does not support subscription to Request-contained Resource Lists.

© 2009 Open Mobile Alliance Ltd. All Rights Reserved.
Used with the permission of the Open Mobile Alliance Ltd. under the terms as stated in this document.

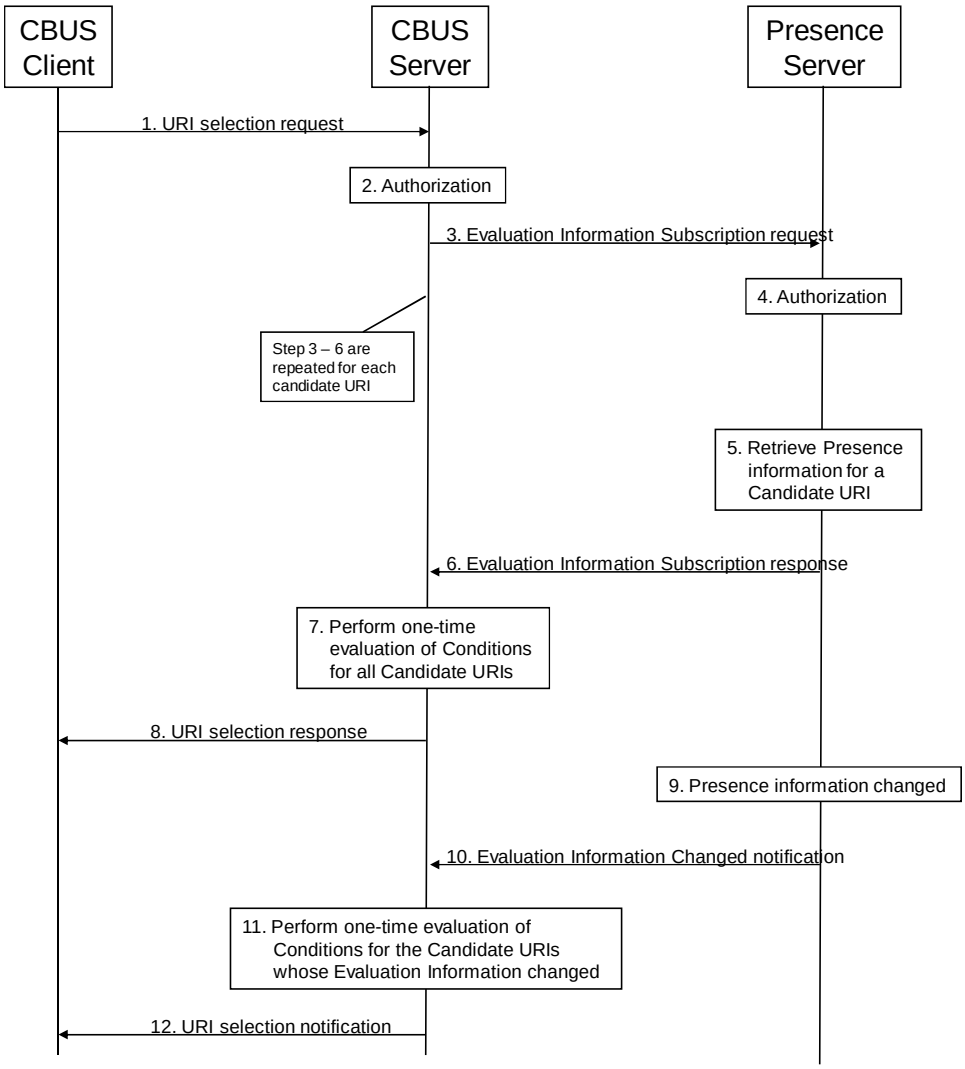

Figure 8: Selecting Group members based on simple Conditions and re-evaluation when the Evaluation Information changed without RLS

1. A CBUS Client that wants to receive Users matching a set of Conditions in real time based on evaluations of Presence information in a time duration sends a URI selection request to the CBUS Server with the following information elements:

   a. A list of SIP URIs of the Users, i.e. of the Candidate URIs;

   b. A list of Conditions based on Presence information to be evaluated;

   c. The Evaluation Parameter indicates that this is a continually re-evaluation when the Evaluation Information changed in a time interval which is greater than zero,

2. The CBUS Server performs an authorization check of the CBUS Client request.

© 2009 Open Mobile Alliance Ltd. All Rights Reserved.
Used with the permission of the Open Mobile Alliance Ltd. under the terms as stated in this document.

3. The CBUS Server identifies that the Conditions are based on Presence information. The CBUS Server sends a Evaluation Information Subscription request on behalf of the CBUS Client to the Presence Server for each of the Candidate URIs received and with the following information elements:
   a. The SIP URI of the User, i.e. of the Candidate URI received from the CBUS Client
   b. The list of filter criteria for Evaluation Information of type Presence information based on the received Conditions
   c. The indication that this is a continually re-evaluation when the Evaluation Information changed in a time duration, i.e. the duration of the subscription is set to the certain seconds.

NOTE: Step 3 – 6 are repeated for each Candidate URI received from the CBUS Client (not shown in the figure).

4. The Presence Server performs an authorization check of the CBUS Server request to verify that the originator, i.e. the CBUS Client is allowed to request the Presence information.
5. The Presence Server retrieves the Presence information related to the list of filter criteria received from the CBUS Server and allowed according to the authorization check for the Presentity corresponding to the Candidate URI received.
6. The Presence Server sends an Evaluation Information Subscription response with Presence information to the CBUS Server.
7. The CBUS Server evaluates the Conditions against the Evaluation Information received in the response from the Presence Server in order to define the Candidate URIs matching the Conditions.
8. The CBUS Server sends a URI selection response to the CBUS Client with the following information elements:
   a. A list of SIP URI of the Users matching the Conditions
9. The Presence Server detects the changes of subscribed Presence information.
10. The Presence Server sends the changes of the subscribed Evaluation Information notification to the CBUS Server.
11. The CBUS Server evaluates the Conditions against the changed Evaluation Information received in the notification from the Presence Server in order to define the Candidate URIs matching the Conditions.
12. The CBUS Server sends a URI selection notification to the CBUS Client with the following information elements:
    a. A list of SIP URI of the Users matching the Conditions

B.3.2 Selecting Group members using Request-contained Resource Lists

The Figure 9 shows the flow when a User with a CBUS Client requests for a dynamic selection of members where the CBUS Server retrieves Evaluation Information by initiating a subscription to Evaluation Information for a multiple of Candidate URIs. The CBUS Server can use this procedure e.g. when RLS as described in [PRS_AD] is deployed in the network in the context of presence and the CBUS Server supports subscription to Request-contained Resource Lists.

© 2009 Open Mobile Alliance Ltd. All Rights Reserved.
Used with the permission of the Open Mobile Alliance Ltd. under the terms as stated in this document.

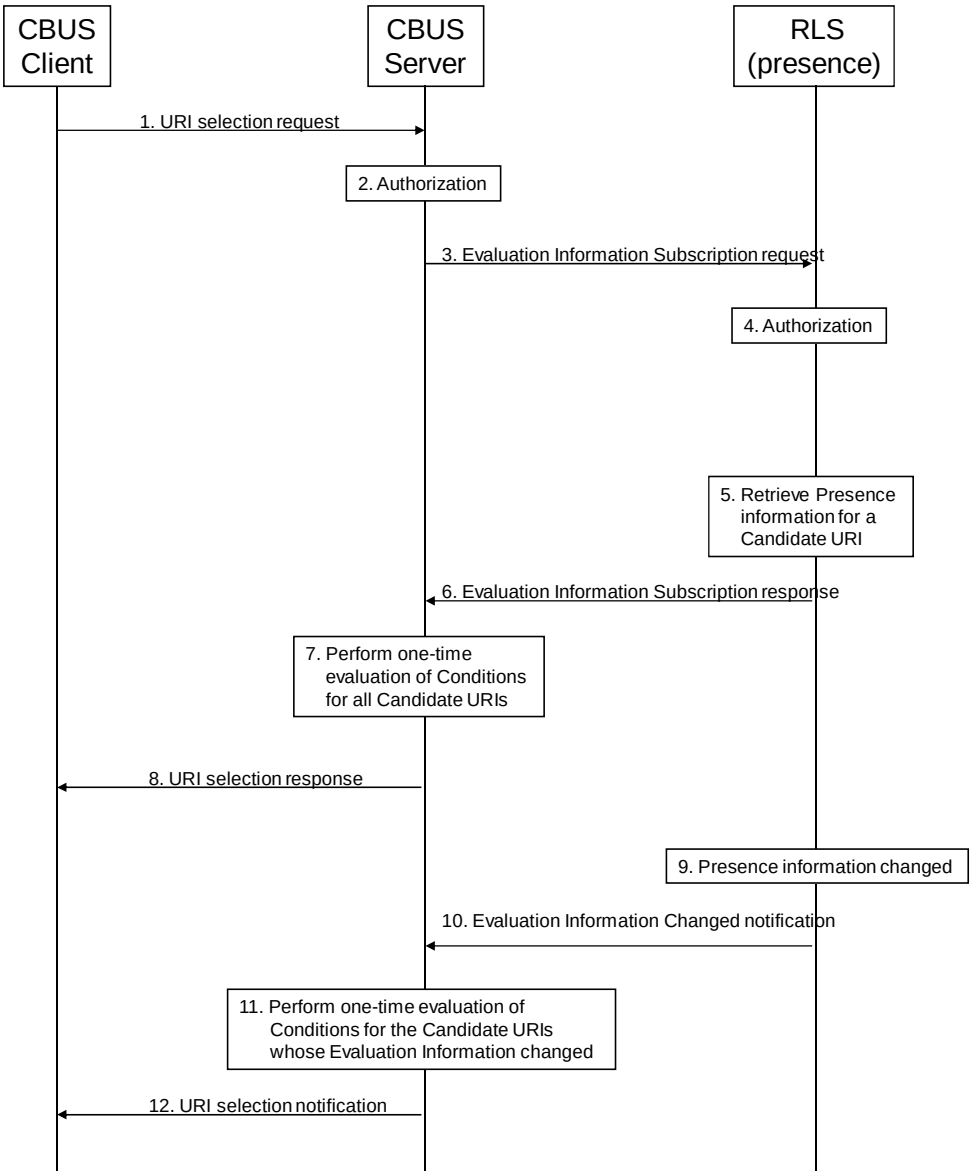

Figure 9: Selecting Group members based on simple Conditions and re-evaluation when the Evaluation Information changed with RLS

1. A CBUS Client that wants to retrieve Users matching a set of Conditions based on sustained evaluations of Presence information in a time duration sends a URI selection request to the CBUS Server with the following information elements:

   a. A list of SIP URIs of the Users, i.e. of the Candidate URIs;

   b. A list of Conditions based on Presence information to be evaluated;

   c. The Evaluation Parameter indicates that this is a continually re-evaluation when the Evaluation Information changed in a time interval which is greater than zero.

2. The CBUS Server performs an authorization check of the CBUS Client request.

© 2009 Open Mobile Alliance Ltd. All Rights Reserved.
Used with the permission of the Open Mobile Alliance Ltd. under the terms as stated in this document.

3. The CBUS Server identifies that the Conditions are based on Presence information. The CBUS Server sends an Evaluation Information Subscription request on behalf of the CBUS Client to the RLS (in the context of presence) for the multiple of Candidate URIs received and with the following information elements:
    a. The Request-contained Resource List that includes the SIP URIs of the Users, i.e. the Candidate URI received from the CBUS Client;
    b. The list of filter criteria for Evaluation Information of type Presence information based on the received Conditions;
    c. The indication that this is a continually re-evaluation when the Evaluation Information changed in a time duration, i.e. the duration of the subscription is set to the certain seconds.
4. The RLS (in the context of presence) performs an authorization check of the CBUS Server request to verify that the originator, i.e. the CBUS Client is allowed to request the Presence information.
5. The RLS (in the context of presence) retrieves the Presence information related to the list of filter criteria received from the CBUS Server and allowed according to the authorization check for the Presentities corresponding to the Candidate URIs received.
6. The RLS (in the context of presence) sends an Evaluation Information Subscription response with the Presentities Presence information to the CBUS Server.
7. The CBUS Server evaluates the Conditions against the Evaluation Information received in the response from the RLS in order to define the Candidate URIs matching the Conditions.
8. The CBUS Server sends a URI selection response to the CBUS Client with the following information elements:
    a. A list of SIP URI of the Users matching the Conditions
9. The RLS (in the context of presence) detects the changes of subscribed Presence information.
10. The RLS (in the context of presence) sends the changes of the subscribed Evaluation Information notification to the CBUS Server.
11. The CBUS Server evaluates the Conditions against the changed Evaluation Information received in the notification from the Presence Server in order to define the Candidate URIs matching the Conditions.
12. The CBUS Server sends a URI selection notification to the CBUS Client with the following information elements:
    a. A list of SIP URI of the Users matching the Conditions

© 2009 Open Mobile Alliance Ltd. All Rights Reserved.
Used with the permission of the Open Mobile Alliance Ltd. under the terms as stated in this document.

Appendix C. CBUS Service Provisioning (informative)

The CBUS Service provider can set up the CBUS Service configurations remotely in the terminal device (i.e. CBUS Client). When DM Enabler is deployed, OMA DM as specified in [DM_SO] provides the support for remote provisioning and management of the Management Object containing necessary configuration parameters for the CBUS Client.

© 2009 Open Mobile Alliance Ltd. All Rights Reserved.
Used with the permission of the Open Mobile Alliance Ltd. under the terms as stated in this document.